1483EN – SS1 - SHOWER STALL - TYPE B ACCESSIBLE SHOWERS

inches

Interior: 45 ½ x 36 ¼ x 75 ⅝
Exterior: 48 x 38 ¾ x 77 ¾

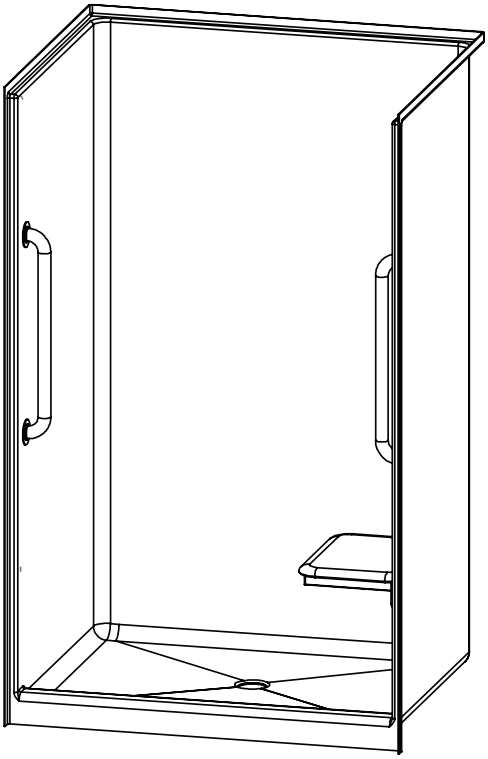

NOTE: This shower stall will come with grab bar reinforcement.

FEATURES

- East zone only
- Gelcoat surface
- 3 ¾" (95 mm) skirt
- 2 ⅜" (60 mm) interior threshold
- Smooth wall
- 5-year limited warranty

OPTIONS

- Grab bars
- Fold-up seat
- Hand-held shower assembly with slide bar
- Pressure balancing mixing valve
- Soap dish
- Curtain rod and/ or shower curtain

CODE COMPLIANCE

- IAPMO Z124-2011

**Code compliant when fully equipped and installed according to guidelines.

AQUATIC ADVANTAGE

- 6 manufacturing facilities
- Private fleet
- Centralized customer service
- Field support

COLOR & TRIM OPTIONS

Stock
Almond
Biscuit
Bone
White

**Additional custom colors available. (Contact Customer Service)

AQUATIC
The bath people

Aquatic products may be specified as Lasco Bathware.

ICC ES PMG

SS1 - SHOWER STALL - TYPE B

AQUATIC
The bath people

TECHNICAL SPECIFICATIONS

Aquatic products may be specified as Lasco Bathware.

1483EN

Interior: 45 ½ x 36 ¼ x 75 ⅝
Exterior: 48 x 38 ¾ x 77 ¾
inches

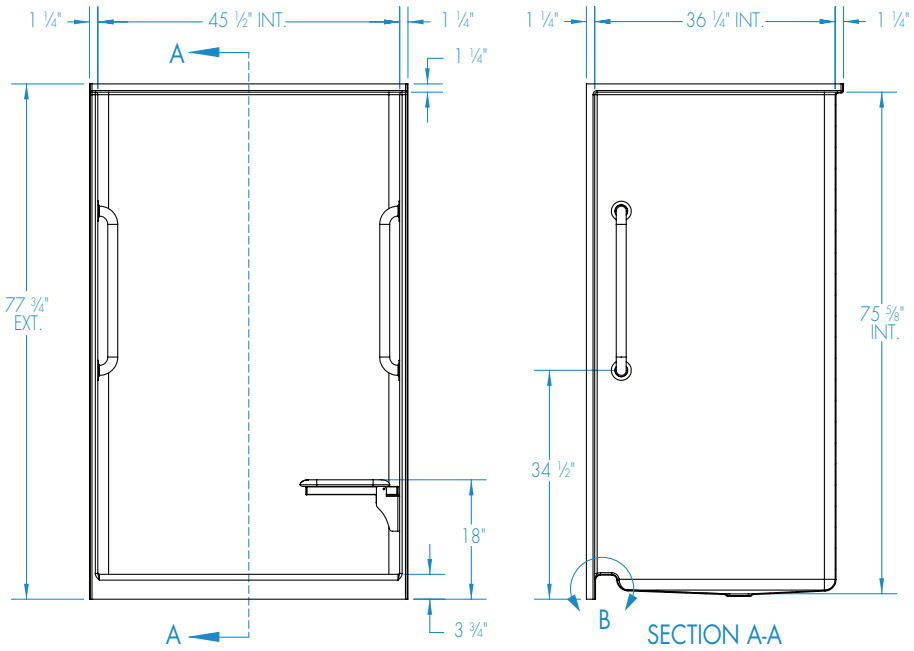

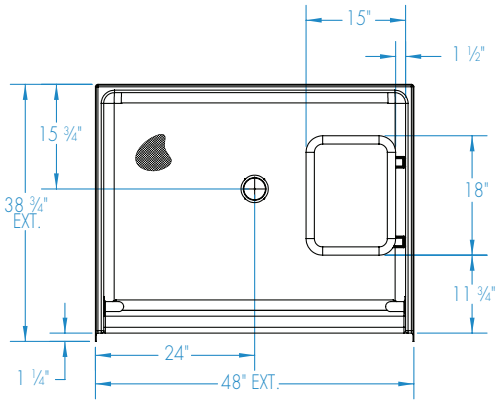

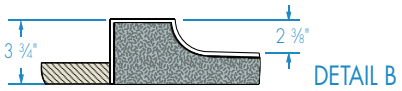

FEATURES lbs (kg)

Dimensional Tolerance ± ⅜". Dimensions needed for site preparation should be measured from the unit. Aquatic assumes no responsibility for preparatory work.

Type and Model #	Material	Wall Finish	Pieces	Drain	Dam/Skirt Height	Net Wt.	Pkg. Wt.
Shower #1483EN	Gelcoat	Smooth	1	Center	3 ¾ (95mm) skirt	118	128

DIMENSIONS

Specifications	inches
Width: Exterior / Interior	48 / 45 ½
Depth: Exterior / Interior	38 ¾ / 36 ¼
Height: Exterior / Interior	77 ¾ / 75 ⅝
Enclosure Opening:	45 ½
Skirt Height:	3 ¾
Drain Rough-In (from Back Wall)	15 ¾
Drain Rough-In (from Side Wall)	24

FRAMING DIMENSIONS inches
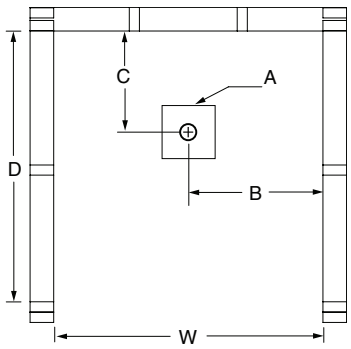
Type	D Depth	W Width	H Height	A	B	C
Alcove	38 ¾	48 ⅛	–	Box Out	24	15 ¾